Cambridge International Examinations
Cambridge International General Certificate of Secondary Education

CANDIDATE NAME	
CENTRE NUMBER	
CANDIDATE NUMBER	

PHYSICS **0625/22**

Paper 2 Core **May/June 2015**

1 hour 15 minutes

Candidates answer on the Question Paper.

No Additional Materials are required.

READ THESE INSTRUCTIONS FIRST

Write your Centre number, candidate number and name on all the work you hand in.
Write in dark blue or black pen.
You may use an HB pencil for any diagrams or graphs.
Do not use staples, paper clips, glue or correction fluid.
DO **NOT** WRITE IN ANY BARCODES.

Answer **all** questions.
Electronic calculators may be used.
You may lose marks if you do not show your working or if you do not use appropriate units.
Take the weight of 1 kg to be 10 N (i.e. acceleration of free fall = 10 m / s^2).

At the end of the examination, fasten all your work securely together.
The number of marks is given in brackets [ ] at the end of each question or part question.

The syllabus is approved for use in England, Wales and Northern Ireland as a Cambridge International Level 1/Level 2 Certificate.

This document consists of **16** printed pages.

DC (NH/SW) 90331/4
© UCLES 2015

CAMBRIDGE International Examinations

[Turn over

www.root19.com +91 - 9969 353 391

1 Fig. 1.1 shows a distance-time graph for a falling object.

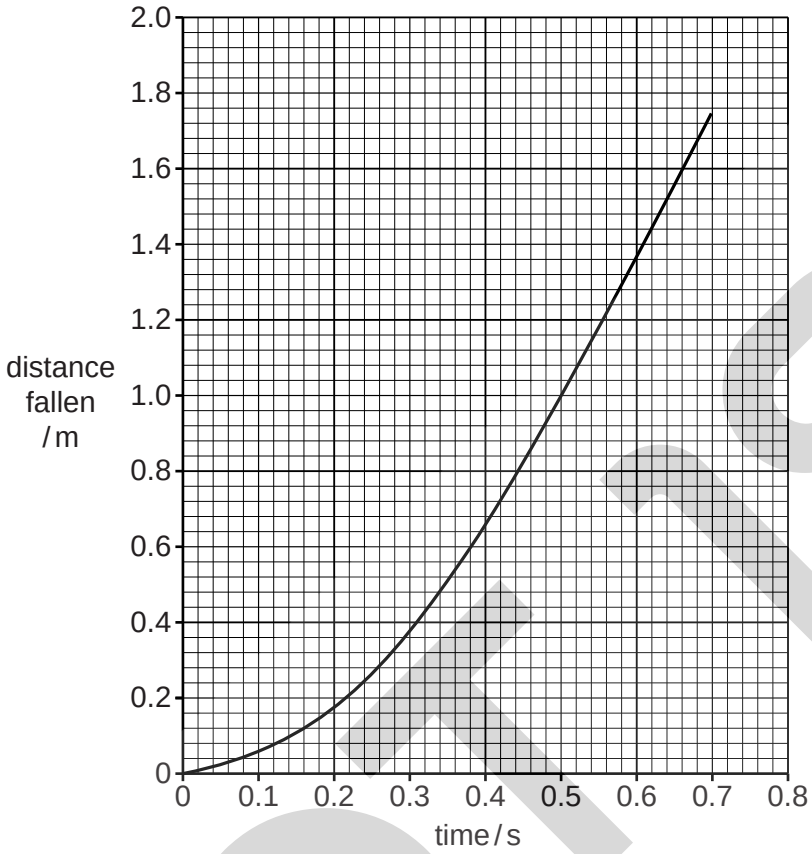

Fig. 1.1

(a) Use this graph to find the time it takes the object to fall from 0.60 m to 1.60 m.

time = ... s [2]

(b) State and explain what the graph shows about the motion of the falling object.

.....

.....

.....[2]

[Total: 4]

www.root19.com +91 - 9969 353 391

2 Fig. 2.1 shows an irregularly shaped piece of card.

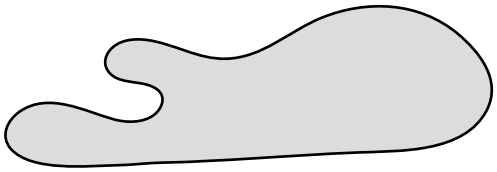

Fig. 2.1

A student is asked to find the centre of mass of the card. The student is provided with a clamp and stand, a small mass attached to a thin string and a long pin.

(a) Describe the procedure for finding the centre of mass of the card. You may draw a diagram.

.....

.....

.....

.....

.....[3]

(b) What simple test can be carried out to confirm that the centre of mass has been found?

.....

.....[1]

[Total: 4]

© UCLES 2015
www.root19.com

+91 - 9969 353 301

3 A student has a beaker of liquid as shown in Fig. 3.1.

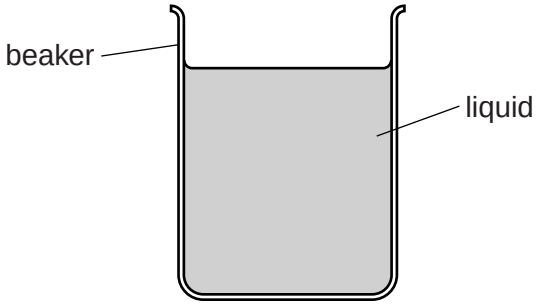

Fig. 3.1

(a) The student makes some measurements. His results are shown in the table.

mass of beaker and liquid	280 g
mass of empty beaker	120 g
volume of liquid	200 cm^3

(i) Calculate the mass of the liquid in the beaker.

mass of liquid = ... g [1]

(ii) Calculate the density of the liquid.

density = ... g/cm^3 [3]

© UCLES 2015
www.root19.com

+91 - 9969 353 391

(b) The student warms the beaker and liquid on an electric heater as shown in Fig. 3.2.

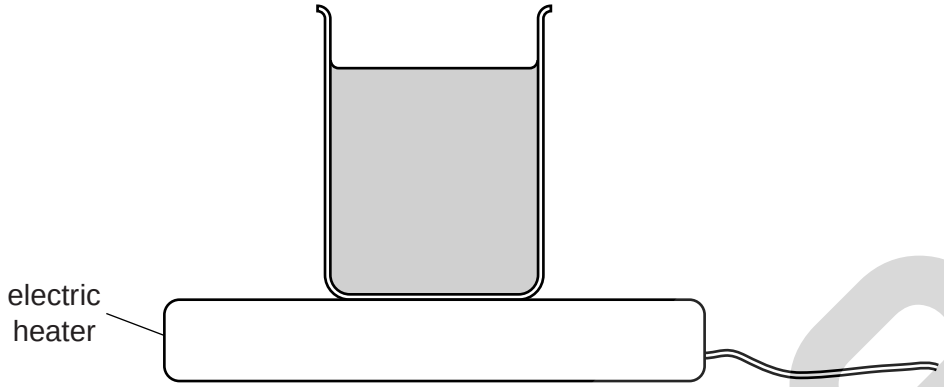

Fig. 3.2

(i) State the name of the process by which thermal energy is transferred through the glass of the beaker.

.....[1]

(ii) Explain how thermal energy is transferred throughout the liquid by convection.

.....

.....

.....

.....[3]

(c) After heating for 20 minutes, the student re-weighs the beaker and liquid. He finds that the mass of the beaker and liquid has decreased to 260 g.

(i) State the name of the process that causes this decrease in mass.

.....[1]

(ii) In terms of molecules, explain how this process occurs.

.....

.....

.....

.....[2]

[Total: 11]

www.root19.com +91 - 9969 353 301

4 At a party, three balloons are filled with a gas less dense than air. The balloons are tied to an empty drink can. The can floats, without moving, in the air above a table, as shown in Fig. 4.1.

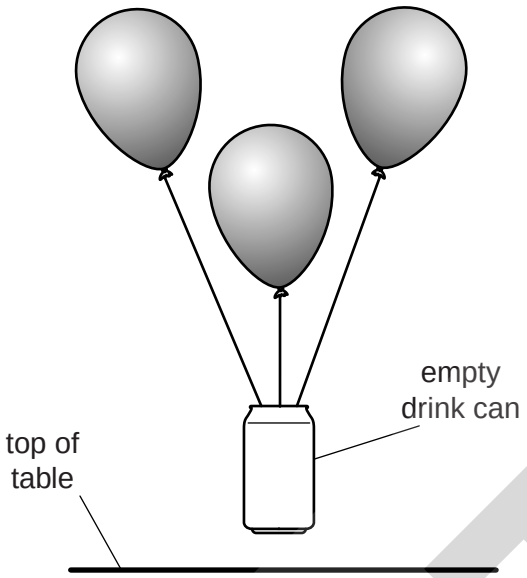

Fig. 4.1

Fig. 4.2

(a) Fig. 4.2 represents the vertical forces acting on the can as it floats in the air.

State the name given to the downward force labelled Y.

.....[1]

(b) In terms of the vertical forces acting on the can, explain why the can does not rise or fall.

.....

.....[2]

(c) A window is opened, causing a draught of air into the room. The window is to the left of the balloons and can, and at the same height.

On Fig. 4.1, draw an arrow indicating the direction of the resultant force on the can. [1]

(d) One of the balloons suddenly bursts.

State and explain what happens to the can.

.....

.....

.....[1]

[Total: 5]

www.root19.com +91 - 9969 353 391

5 A footballer kicks a football and it bounces to another player.

Fig. 5.1 shows part of the path taken by the ball.

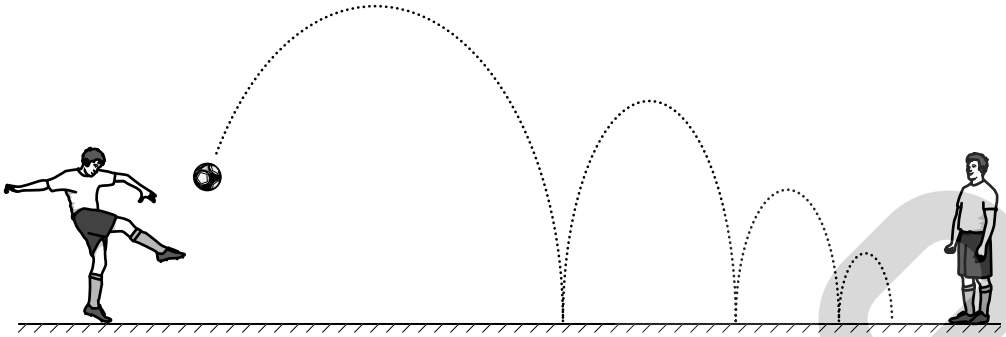

Fig. 5.1

(a) Use words from the box to complete the sentences below. Each word may be used once, more than once, or not at all.

direction	downwards	forwards	mass	shape	slower	upwards

(i) Each time the football moves ....., it gains gravitational potential energy. [1]

(ii) Each time the football hits the ground, it changes ....., and this results in energy stored as strain energy (elastic potential energy). [1]

(b) Each time the football hits the ground, energy is transferred away from the ball.

(i) State how you can tell this from the diagram.

.....

.....[1]

(ii) State what happens to the energy that is transferred away from the ball.

.....[1]

[Total: 4]

www.root19.com +91 - 9969 353 301

6 Fig. 6.1 shows a hydroelectric power station.

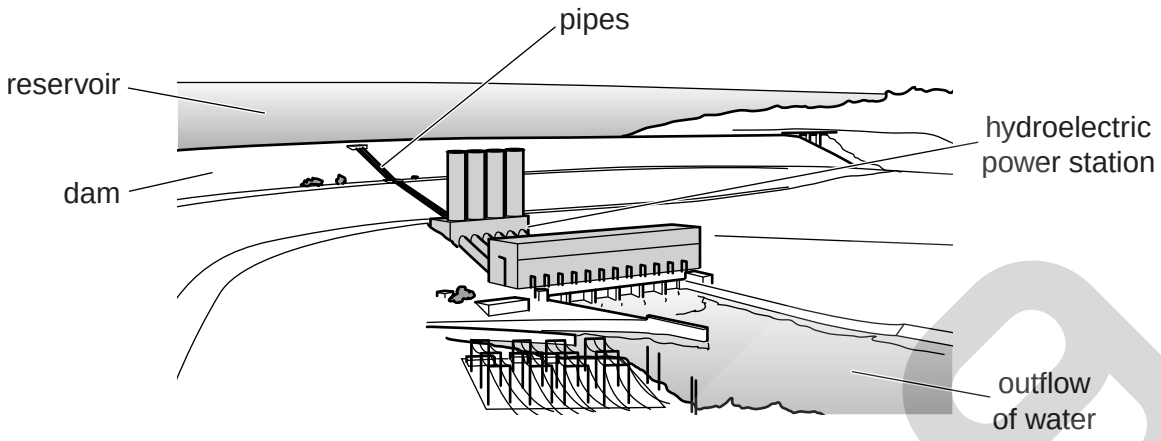

Fig. 6.1

(a) These are some of the stages explaining how the power station works. They are not in the correct order.

A The electromagnets turn inside a large coil.

B Water flows down pipes from the reservoir to the turbine.

C Inside the generator, the spinning shaft turns electromagnets.

D The falling water keeps the turbine spinning.

Use the letters A, B, C and D to complete the flow chart to explain how the power station works.

Rainwater flows off the hills into the reservoir behind the dam.

↓

[ ]

↓

[ ]

↓

The turbine transfers energy by a spinning shaft to a generator.

↓

[ ]

↓

[ ]

↓

Electricity is generated.

[3]

www.root19.com +91 - 9969 353 391

(b) Hydroelectric power is described as a renewable source of energy.

Explain what is meant by the term *renewable.*

.....

.....[1]

(c) Using a renewable source of energy is one advantage of hydroelectric power compared with other energy sources.

(i) State two other advantages of hydroelectric power.

1. .....

2. .....
[2]

(ii) State one disadvantage of hydroelectric power.

.....[1]

[Total: 7]

© UCLES 2015
www.root19.com

+91 - 9969 353 301

7 Fig. 7.1 shows a car and a snow tractor.

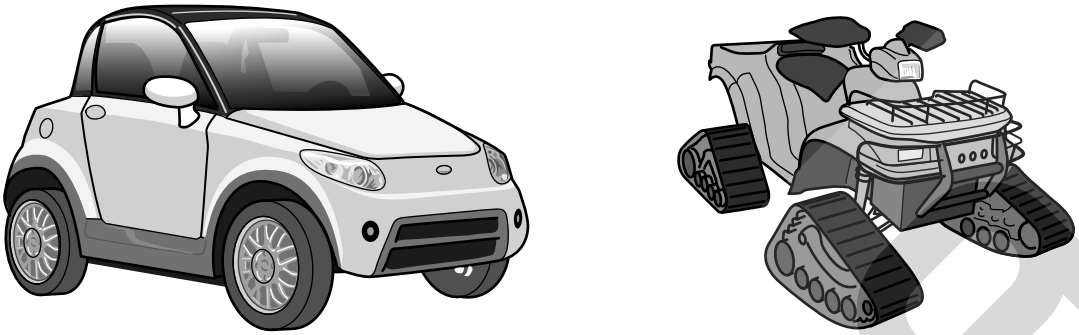

Fig. 7.1

The car and the snow tractor have the same weight.

(a) Explain why the snow tractor can travel across soft snow without sinking, but the car cannot.

.....

.....

.....

.....

.....[3]

(b) The car driver checks his tyre pressure in a warm garage. The pressure of the air inside the tyre when it is warm is 24.0 N / cm^2.

The car is driven outside and left in the snow.

(i) Suggest a value for the pressure of the air inside the tyre when it is cold.

pressure = ... N / cm^2 [1]

(ii) In terms of the air molecules inside the tyre, explain the change in the pressure of the air.

.....

.....

.....

.....[2]

[Total: 6]

© UCLES 2015
www.root19.com

+91 - 9969 353 391

8 **(a)** A student arranges two 45° prisms as shown in Fig. 8.1. He aims a ray of red light to hit the surface of one of the prisms at 90°.

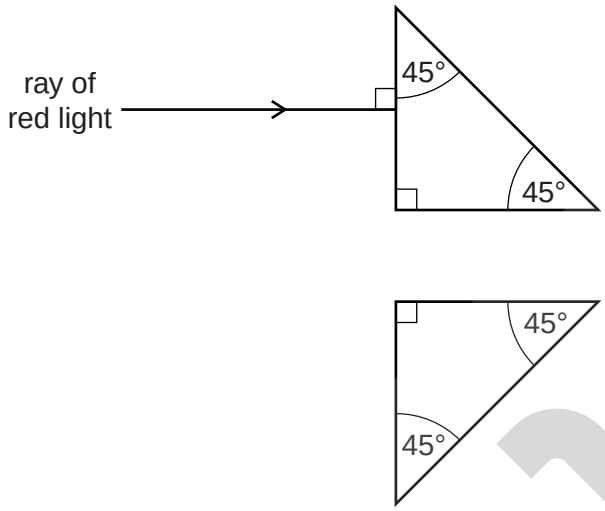

Fig. 8.1

The critical angle for the glass is 42°.

On Fig. 8.1, draw the path of the light through the prisms. [4]

(b) Visible light is one region of the electromagnetic spectrum, as represented in Fig. 8.2.

radio waves	microwaves	infra-red waves	visible light	ultraviolet waves		

long wavelength short wavelength

Fig. 8.2

(i) Two regions of the electromagnetic spectrum are missing from Fig. 8.2.

State the name of the missing region with the longer wavelength.

.....[1]

(ii) An infra-red sensor is fitted into a room as part of an intruder alarm system.

Explain how the sensor detects a person in the room.

.....

.....[2]

(iii) State two properties that are the same for all electromagnetic waves.

1. .....

2. .....
[2]

[Total: 9]

www.root19.com +91 - 9969 353 301

9 A student has two powerful bar magnets and an iron rod.

The student uses the N pole of one magnet and the S pole of the other magnet. Starting from the centre of the iron rod he rubs the poles against the rod out to its ends. He repeats this many times.

Fig. 9.1 shows how the student uses the two magnets to make the iron rod into a magnet.

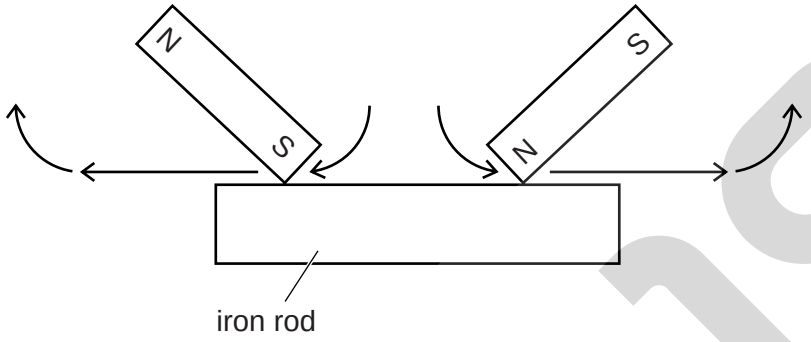

Fig. 9.1

(a) Label the magnetic poles created on the iron rod. [1]

(b) Describe how to test whether the iron rod has become a magnet.

.....

.....[1]

(c) Suggest a material that could be used to make a permanent magnet.

.....[1]

(d) Describe how a permanent magnet can be demagnetised.

.....

.....

.....[2]

© UCLES 2015

(e) Another way of making a magnet is shown in Fig. 9.2.

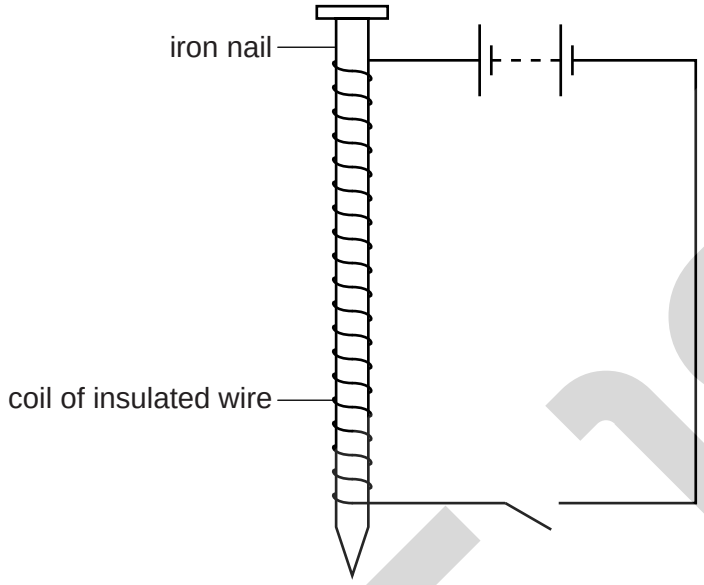

Fig. 9.2

(i) State the name given to this type of magnet.

.....[1]

(ii) Suggest an advantage of this type of magnet.

.....

.....[1]

(iii) Suggest one use for this type of magnet.

.....[1]

[Total: 8]

© UCLES 2015
www.root19.com

+91 - 9969 353 301

10 Fig. 10.1 shows a charger for a mobile phone (cell phone).

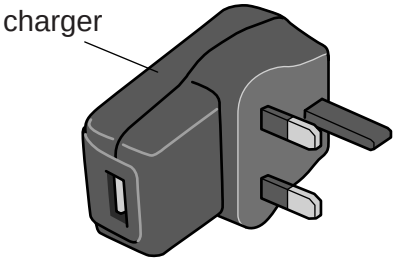

Fig. 10.1

The charger contains a transformer.

(a) **(i)** Suggest a suitable material for the coils of the transformer.

.....[1]

(ii) The transformer has an input voltage of 240 V and an output voltage of 6.0 V. There are 6000 turns on the input coil.

Calculate the number of turns on the output coil.

number of turns = ...[3]

(b) Place a tick in the box alongside the condition in which it could be dangerous to use the charger.

☐ cool

☐ damp

☐ dry

☐ warm

[1]

[Total: 5]

© UCLES 2015
www.root19.com

+91 - 9969 353 391

11 In some areas there are high levels of background radiation.

(a) Explain what is meant by *background radiation*.

.....

.....[2]

(b) Suggest how background radiation can be detected.

.....

.....[1]

(c) Radon-219 ($^{219}_{86}Rn$) is a radioactive gas.

Complete the table below to show the number of each type of particle in a neutral atom of $^{219}_{86}Rn$.

type of particle	number
electron	
neutron	
proton	

[3]

(d) Alpha particles are emitted when radon-219 decays.

(i) Tick the box alongside the correct symbol for an alpha particle.

☐ α

☐ β

☐ γ

[1]

(ii) From what part of the radon-219 atom is the alpha particle emitted?

.....[1]

(iii) Complete the table below to show the composition of an alpha particle.

type of particle	number
electron	
neutron	
proton	

[2]

[Total: 10]

www.root19.com +91 - 9969 3[illegible]

12 A student sets up the circuit shown in Fig. 12.1.

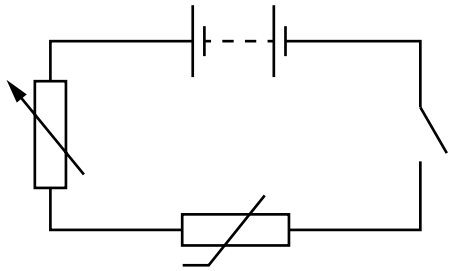

Fig. 12.1

(a) On Fig. 12.1, label the thermistor with a T. [1]

(b) The student wants to determine the resistance of the thermistor at different temperatures.

Complete the sentences for the meters he should use in the circuit.

(i) The meter to be connected in series with the thermistor is ..... . [1]

(ii) The meter to be connected in parallel with the thermistor is ..... . [1]

(c) These are the student's results for a temperature of 20 °C.

p.d. across thermistor / V	current in thermistor / A
3.2	0.0050

(i) Calculate the resistance of the thermistor at 20 °C.

resistance = ...Ω [3]

(ii) When the temperature increases, the resistance of the thermistor decreases.

State what happens, if anything, to the current in the thermistor.

.....[1]

[Total: 7]

Permission to reproduce items where third-party owned material protected by copyright is included has been sought and cleared where possible. Every reasonable effort has been made by the publisher (UCLES) to trace copyright holders, but if any items requiring clearance have unwittingly been included, the publisher will be pleased to make amends at the earliest possible opportunity.

To avoid the issue of disclosure of answer-related information to candidates, all copyright acknowledgements are reproduced online in he Cambridge International Examinations Copyright Acknowledgements Booklet. This is produced for each series of examinations and is freely available to download at www.cie.org.uk after the live examination series.

Cambridge International Examinations is part of he Cambridge Assessment Group. Cambridge Assessment is the brand name of University of Cambridge Local Examinations Syndicate (UCLES), which is itself a department of he University of Cambridge.

www.root19.com +91 - 9969 353 391